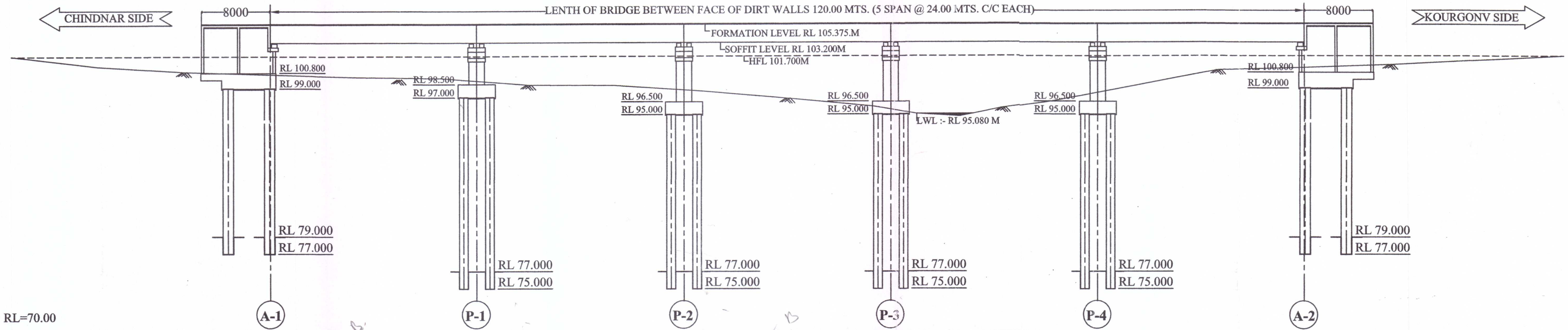

DATUM LINE RL=70.00

GROUND LEVEL	101.700	100.540	99.930	99.620	99.460	99.180	98.430	98.370	97.720	96.870	95.930	95.080	94.770	95.780	96.420	98.260	100.100	100.360	100.690	100.880
CHAINAGE	240.00	230.00	220.00	210.00	200.00	190.00	180.00	170.00	160.00	150.00	140.00	135.00	130.00	125.00	120.00	110.00	100.00	90.00	80.00	60.00

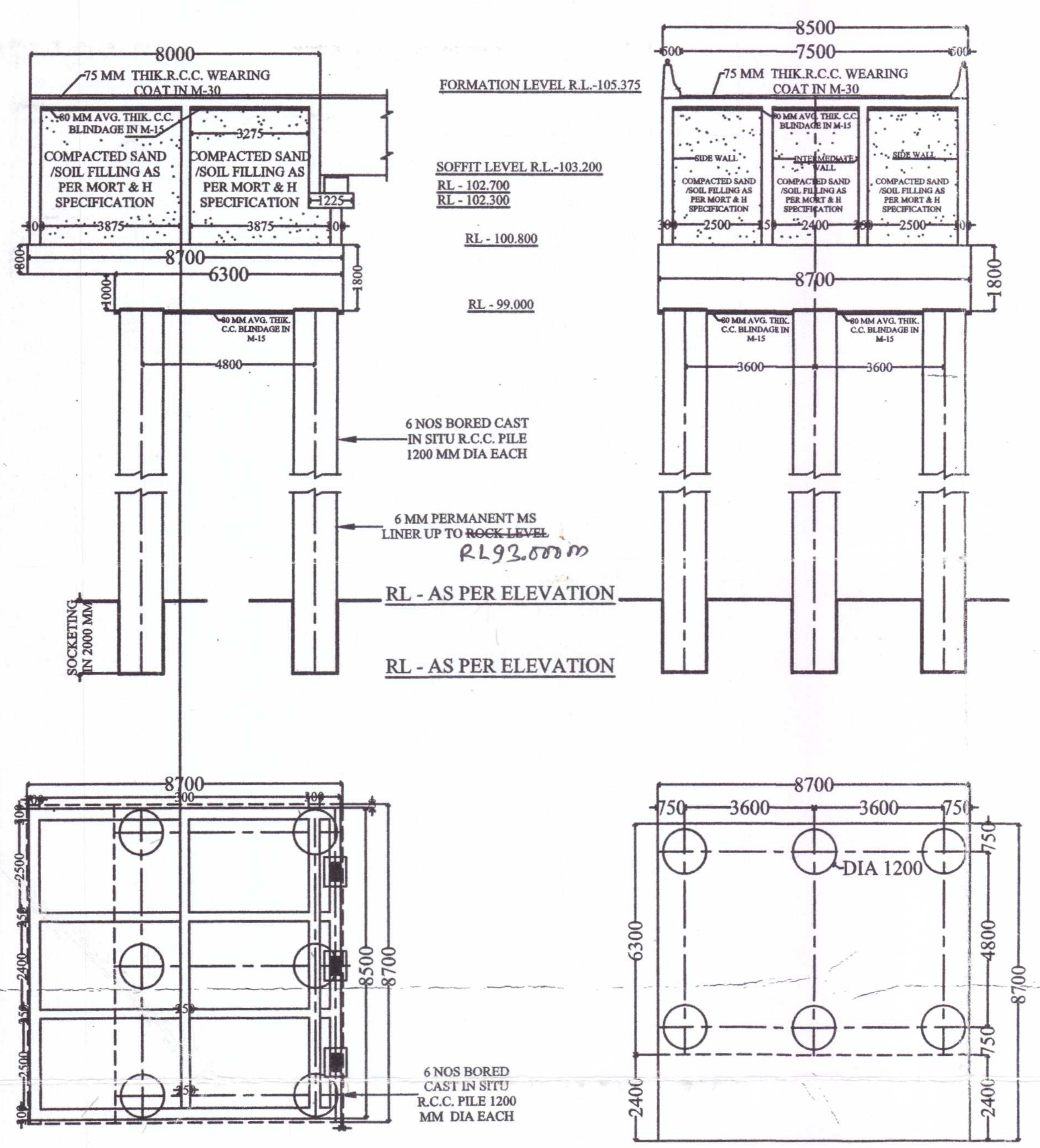

PLAN OF ABUTMENT

PLAN OF PILE & PILE CAP

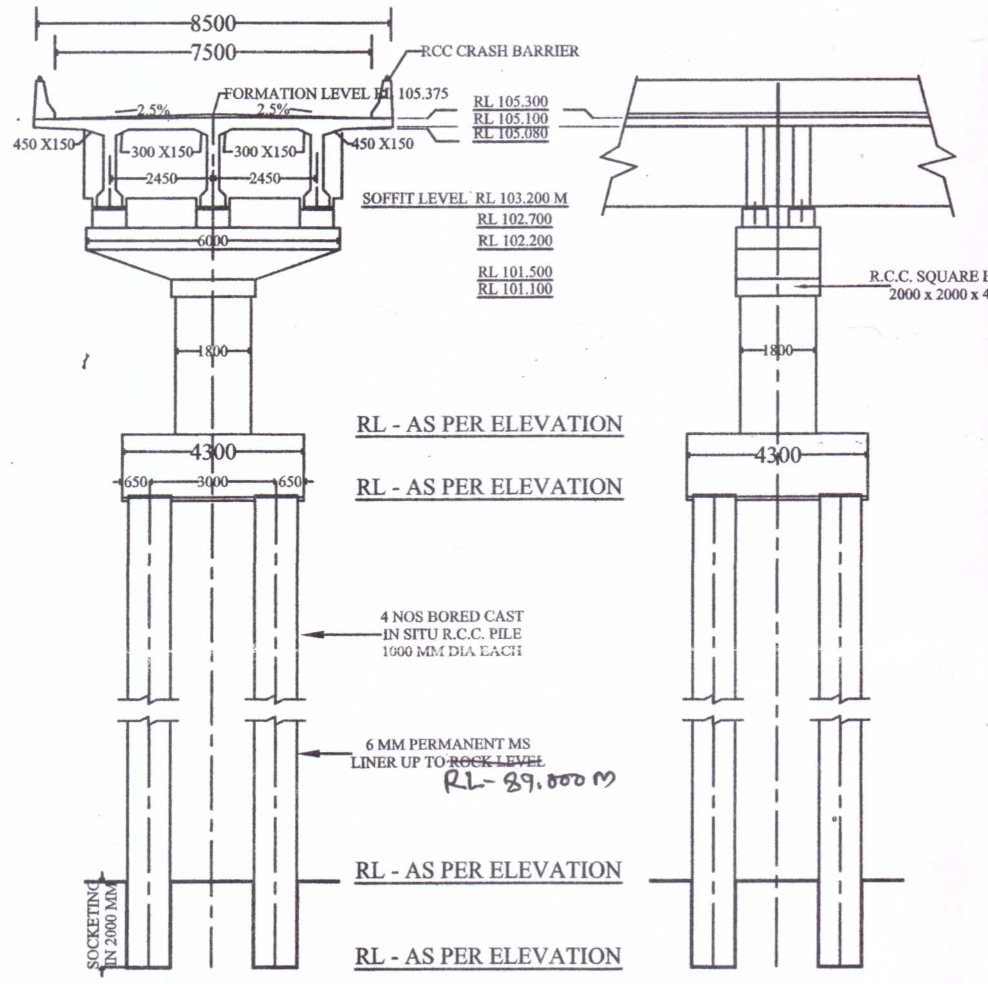

SECTIONAL ELEVATION OF PIER ALONG TRAFFIC DIRECTION

SECTIONAL ELEVATION OF PIER ALONG CURRENT DIRECTION

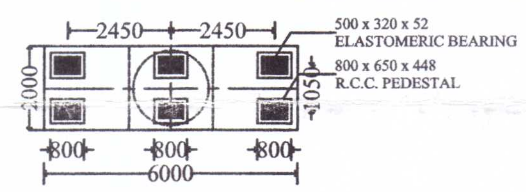

PLAN OF PIER CAP

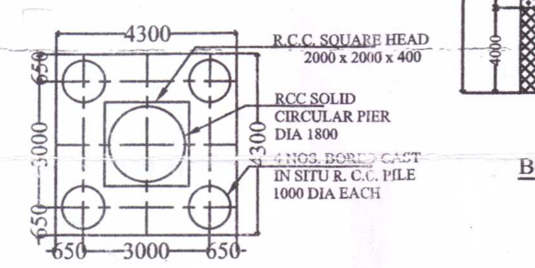

PLAN OF PILE CAP

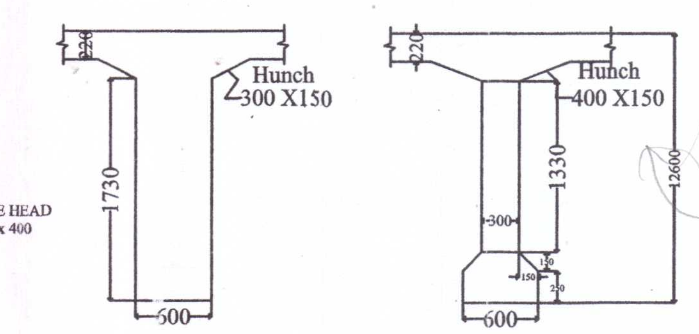

Detail of Girder at End Support

Detail of Girder at Mid Span

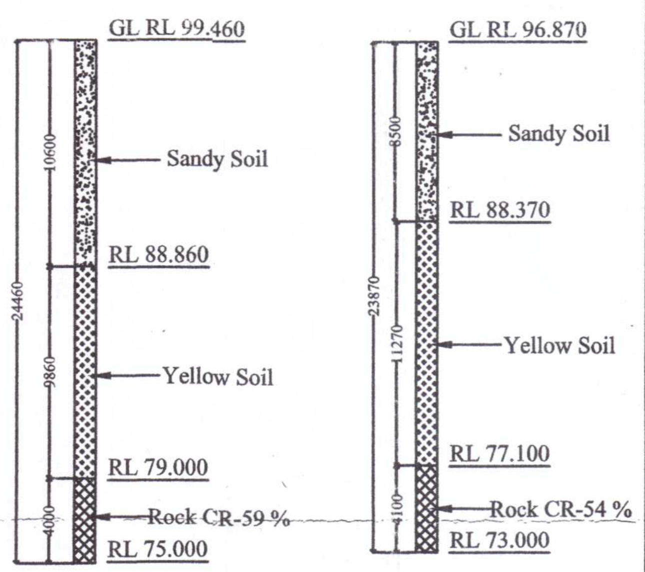

B-01 CH.-200

B-02 CH.-150

CERTIFICATE :-

This is certified that the boring result shown above is correct.

S/E S.D.O. E.E

NOTE S

1. TYPE OF BRIDGE - HIGH LEVEL BRIDGE
2. LENTH OF BRIDGE - 120.00 M (BETWEEN FACE OF DIRT WALL)
3. OVER ALL WIDTH OF BRIDGE - 8.50M.
4. CARRAGE WAY WIDTH OF BRIDGE - 7.50M
5. FORMATION LEVEL - RL 105.375 M
6. SOFFIT LEVEL - RL 103.200 M
7. H.F.L. - RL 101.700 M
8. L.W.L. - RL 95.080M
9. L.B.L. - RL 94.770M
10. CATCHMENT AREA - 225.040 SQKM
11. DESIGN DISCHRGE - 1215.40 CUMEC
12. DESIGN VELOCITY - 2.60 M /sec
13. SCOUR LEVEL AT PIER - RL 91.160 M
14. SCOUR LEVEL AT ABUT. - RL 95.010 M
15. FOUNDATION LEVEL PIER - P1, P2 ,P3 & P4 RL -75.000M
    ABUTMENT - A1 & A2 RL -77.000 M.
16. TYPE OF FOUNDATION - PILE FOUNDATION
17. TYPE OF SUB STRUCTURE - R.C.C.SOLID CIRCULAR
18. TYPE OF SUPER STRUCTURE - R.C.C. T- BEAM SLAB
19. TYPE OF BEARING - ELASTOMERIC BEARING
20. TYPE OF RAILING - R.C.C. CRASH BARRIER
21. TYPE OF APPROACH SLAB - R.C.C. M30 GRADE
22. TYPE OF WEARING COAT - 75 MM THICK R.C.C. M-30
23. TYPE OF EXPANSION JOINT - STRIP SEAL EXPANSION JOINTS
24. TYPE OF NAME PLATE - GRANITE PLATE
25. DESIGN LOADING - ONE LANE OF CLASS 70R OR TWO LANE OF CLASS " A " LOADING WHICHEVER IS SEVER EFFECT.
26. SAFE BEARING CAPACITY - 40 T/SQM

S.D.O	E.E.	S.E.	C.E.

OFFICE OF THE CHIEF ENGINEER
PWD BRIDGE CONSTRUCTION ZONE RAIPUR (C.G.)

PROJECT :- CONSTRUCTION OF HIGH LEVEL BRIDGE ACROSS HANDAWADA RIVER IN KM 7/8 ON CHINDNAR TO KOURGONV ROAD.

GENERAL ARRANGEMENT DRAWING

DRAWN BY	DRAWING No	DATE: